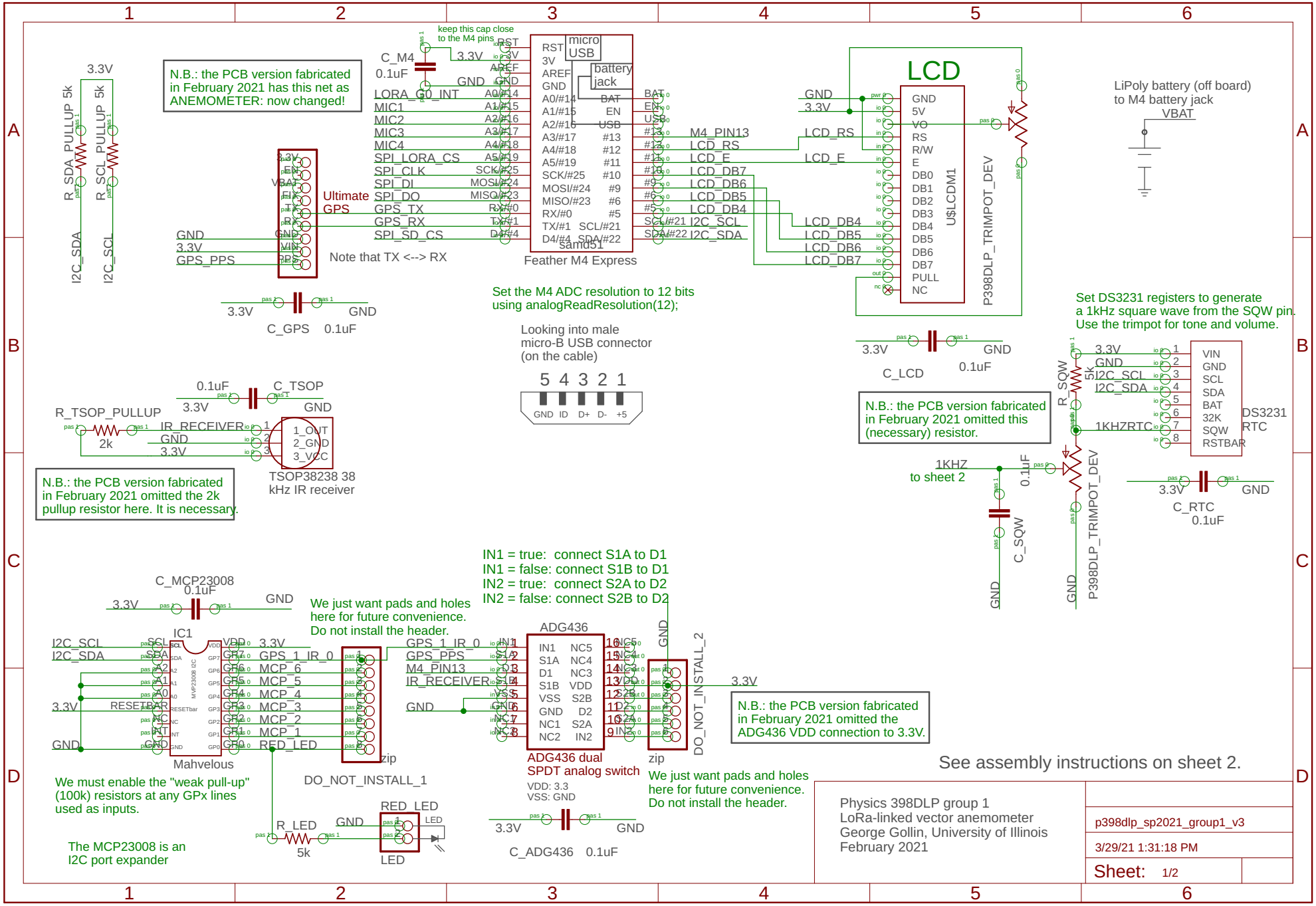

3/29/21 1:31:39 PM /Physics_education/physics_398dlp/EAGLE_pcb/projects/p398dlp_sp2021_group1_v3/p398dlp_sp2021_group1_v3.sch (Sheet: 1/2)

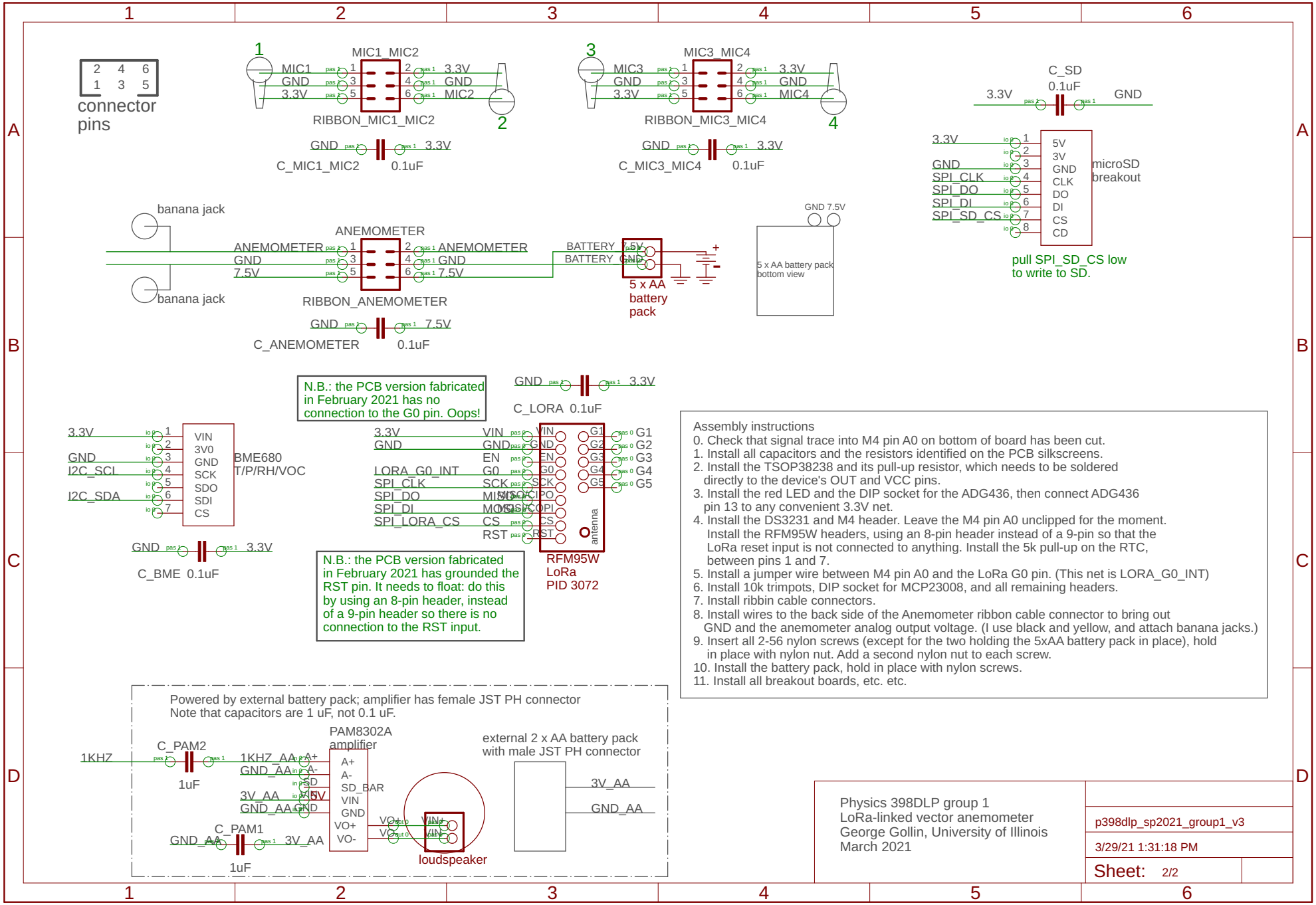

3/29/21 1:31:39 PM /Physics_education/physics_398dlp/EAGLE_pcb/projects/p398dlp_sp2021_group1_v3/p398dlp_sp2021_group1_v3.sch (Sheet: 2/2)