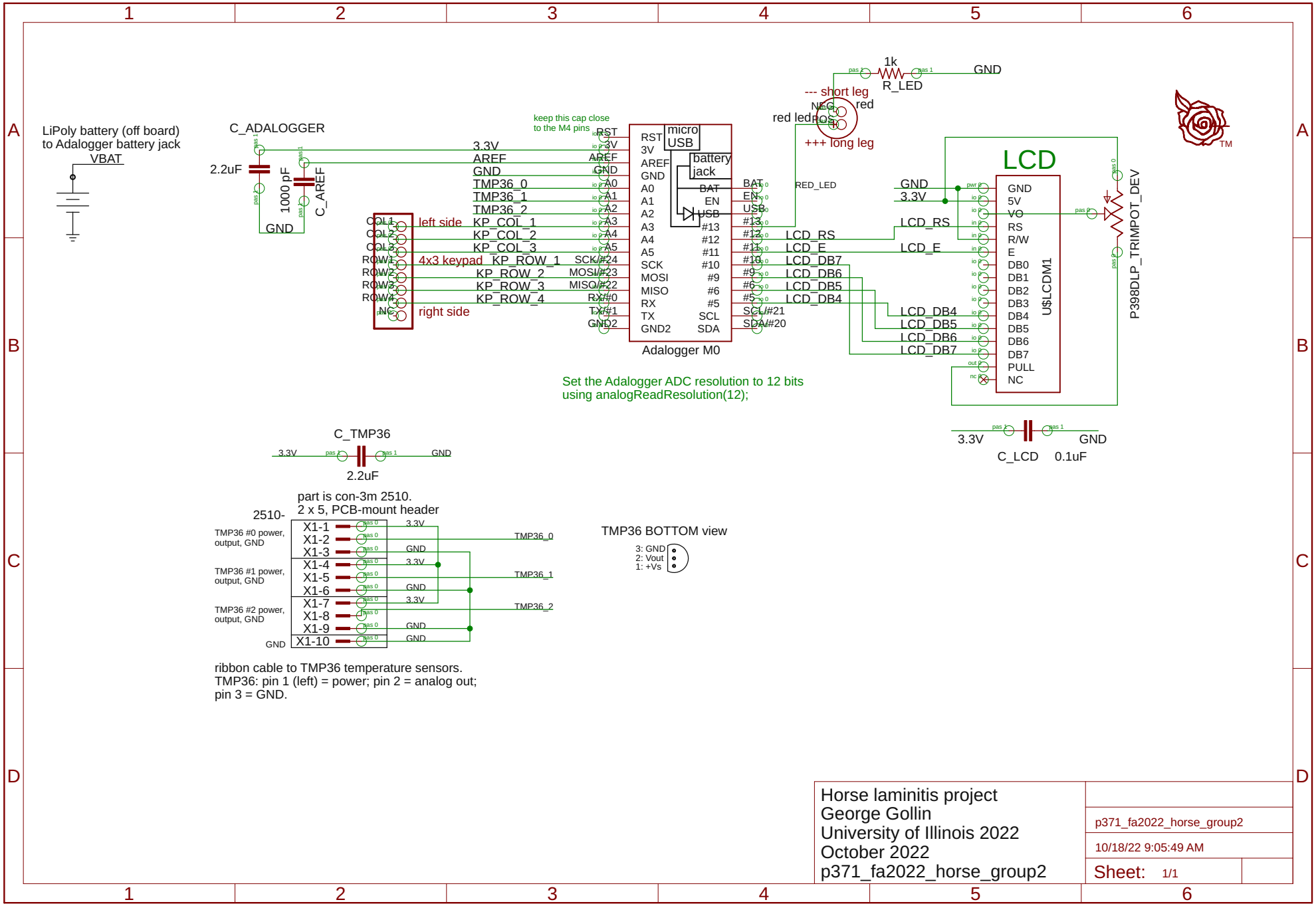

Horse laminitis project
George Gollin
University of Illinois 2022
October 2022
p371_fa2022_horse_group2

p371_fa2022_horse_group2

10/18/22 9:05:49 AM

Sheet: 1/1