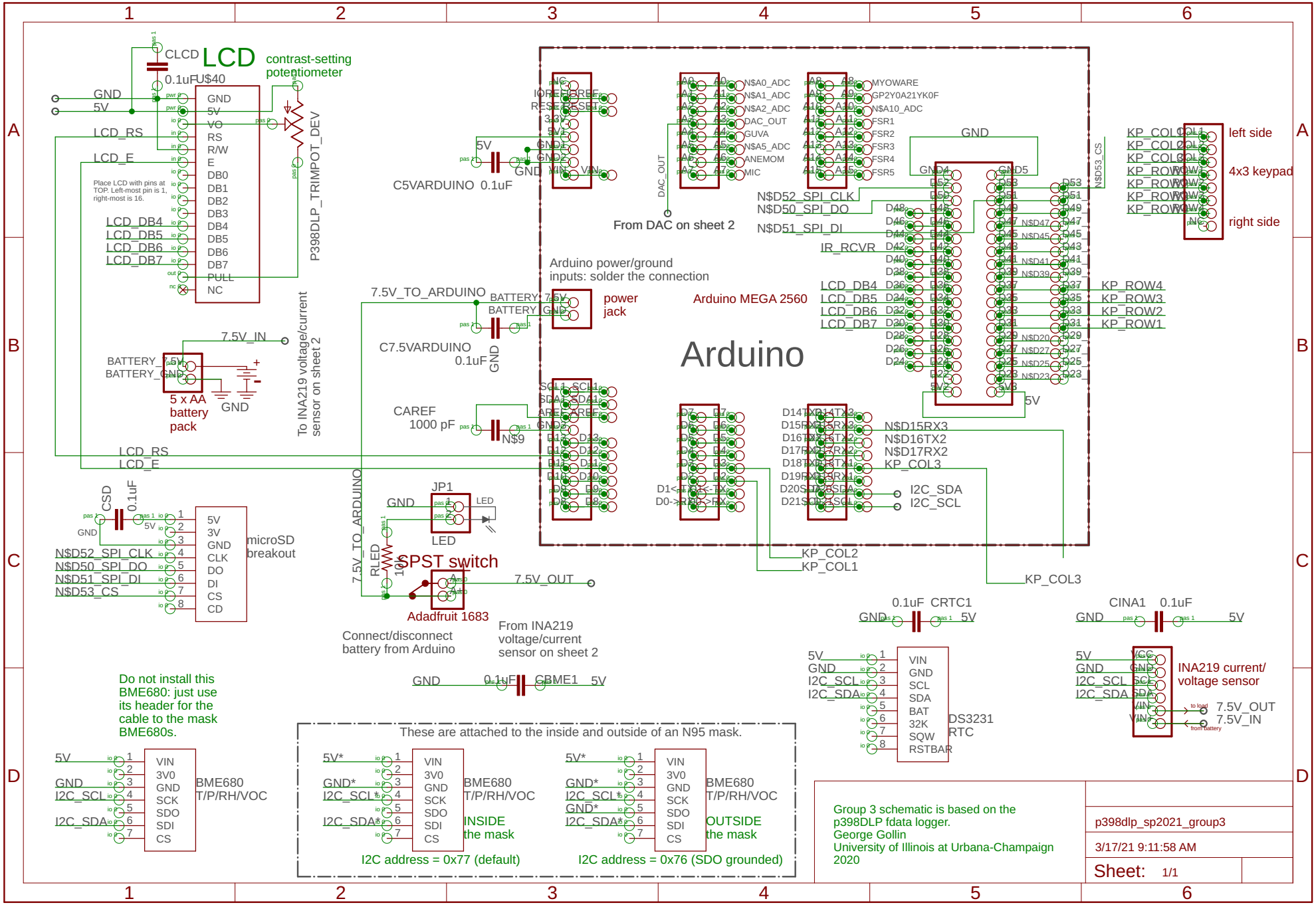
LCD
CLCD
0.1uF
U$40
contrast-setting potentiometer
P398DLP_TRIMPOT_DEV
GND
5V
VO
RS
R/W
E
DB0
DB1
DB2
DB3
DB4
DB5
DB6
DB7
PULL
NC
LCD_RS
LCD_E
Place LCD with pins at TOP. Left-most pin is 1, right-most is 16.
LCD_DB4
LCD_DB5
LCD_DB6
LCD_DB7
Arduino
Arduino MEGA 2560
Arduino power/ground inputs: solder the connection
C5VARDUINO 0.1uF
From DAC on sheet 2
DAC_OUT
N$A0_ADC
N$A1_ADC
N$A2_ADC
DAC_OUT
GUVA
N$A5_ADC
ANEMOM
MIC
MYOWARE
GP2Y0A21YK0F
N$A10_ADC
FSR1
FSR2
FSR3
FSR4
FSR5
N$D52_SPI_CLK
N$D50_SPI_DO
N$D51_SPI_DI
IR_RCVR
N$D53_CS
KP_COL1
KP_COL2
KP_COL3
KP_ROW1
KP_ROW2
KP_ROW3
KP_ROW4
left side
4x3 keypad
right side
7.5V_TO_ARDUINO
BATTERY_7.5V
BATTERY_GND
power jack
C7.5VARDUINO 0.1uF
7.5V_IN
BATTERY_7.5V
BATTERY_GND
5 x AA battery pack
To INA219 voltage/current sensor on sheet 2
CAREF 1000 pF
N$9
I2C_SDA
I2C_SCL
N$D15RX3
N$D16TX2
N$D17RX2
KP_COL3
KP_COL2
KP_COL1
CSD 0.1uF
microSD breakout
N$D52_SPI_CLK
N$D50_SPI_DO
N$D51_SPI_DI
N$D53_CS
JP1
LED
RLED 10k
SPST switch
Adadfruit 1683
7.5V_OUT
Connect/disconnect battery from Arduino
From INA219 voltage/current sensor on sheet 2
GND 0.1uF CBME1 5V
0.1uF CRTC1
DS3231 RTC
VIN
GND
SCL
SDA
BAT
32K
SQW
RSTBAR
CINA1 0.1uF
INA219 current/ voltage sensor
7.5V_OUT
7.5V_IN
Do not install this BME680: just use its header for the cable to the mask BME680s.
BME680 T/P/RH/VOC
VIN
3V0
GND
SCK
SDO
SDI
CS
These are attached to the inside and outside of an N95 mask.
INSIDE the mask
OUTSIDE the mask
I2C address = 0x77 (default)
I2C address = 0x76 (SDO grounded)
Group 3 schematic is based on the p398DLP fdata logger.
George Gollin
University of Illinois at Urbana-Champaign
2020
p398dlp_sp2021_group3
3/17/21 9:11:58 AM
Sheet: 1/1